ST3232EB
ST3232EC

± 15 kV ESD protection 3 to 5.5 V low power, up to 250 kbps, RS-232 drivers and receivers

Features

- ESD protection for RS-232 I/O pins
- ±15 kV human body model
- ±8 kV IEC 1000-4-2 contact discharge
- 300 µA supply current
- 250 kbps minimum guaranteed data rate
- 6V/µs minimum guaranteed slew rate
- Meet EIA/TIA-232 specifications down to 3 V
- Available in DIP-16, SO-16, SO-16 large SSOP16 and TSSOP16

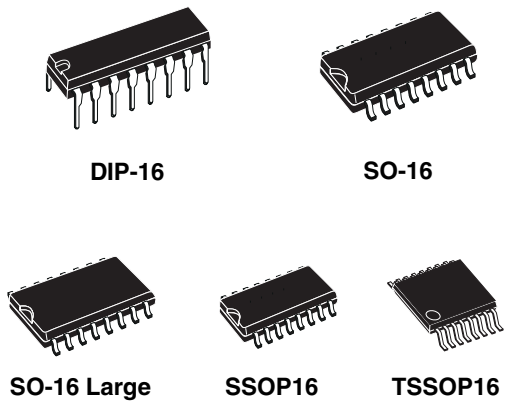

Description

The ST3232E is a 3 V powered EIA/TIA-232 and V.28/V.24 communication interfaces with low power requirements, high data-rate capabilities and enhanced electrostatic discharge (ESD) protection to ± 8 kV using IEC1000-4-2 Contact Discharge and ± 15 kV using the Human Body Model. ST3232E has a proprietary low dropout transmitter output stage providing true RS-232 performance from 3 to 5 V supplies with a dual charge pump. The charge pump requires only four small 0.1 µF standard external capacitors for operations from 3 V supply.

The ST3232E has two receivers and two drivers.

The device is guaranteed to run at data rates of 250Kbps while maintaining RS-232 output levels.

Typical applications are Notebook, Subnotebook and Palmtop Computers, Battery Powered Equipment, Hand-Held Equipment, Peripherals and Printers.

Table 1. Device summary

Order codes	Temp. range	Packages	Packaging
ST3232ECN	0 to 70 °C	DIP-16	25parts per tube / 40tube per box
ST3232EBN	-40 to 85 °C	DIP-16	25parts per tube / 40tube per box
ST3232ECDR	0 to 70 °C	SO-16 (tape and reel)	2500 parts per reel
ST3232EBDR	-40 to 85 °C	SO-16 (tape and reel)	2500 parts per reel
ST3232ECWR	0 to 70 °C	SO-16 Large (tape and reel)	1000 parts per reel
ST3232EBWR	-40 to 85 °C	SO-16 Large (tape and reel)	1000 parts per reel
ST3232ECPR	0 to 70 °C	SSOP16 (tape and reel)	1350 parts per reel
ST3232EBPR	-40 to 85 °C	SSOP16 (tape and reel)	1350 parts per reel
ST3232ECTR	0 to 70 °C	TSSOP16 (tape and reel)	2500 parts per reel
ST3232EBTR	-40 to 85 °C	TSSOP16 (tape and reel)	2500 parts per reel

Contents

1 Pin configuration 3

2 Absolute maximum ratings 4

3 Electrical characteristics 5

4 Application 7

5 Typical performance characteristics 8

6 Package mechanical data 9

7 Revision history 19

1 Pin configuration

Figure 1. Pin connection

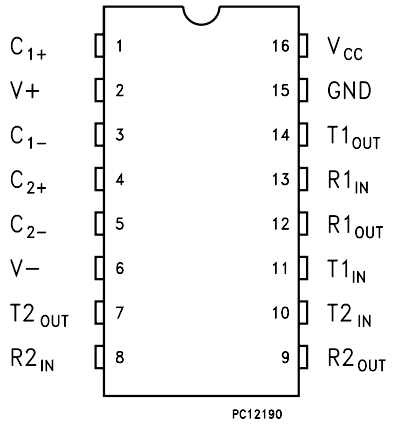

Table 2. Pin description

Pin n°	Symbol	Name and function
1	C_1+	Positive terminal for the first charge pump capacitor
2	V+	Doubled voltage terminal
3	C_1-	Negative Terminal for the first charge pump capacitor
4	C_2+	Positive terminal for the second charge pump capacitor
5	C_2-	Negative terminal for the second charge pump capacitor
6	V-	Inverted voltage terminal
7	$T2_{OUT}$	Second transmitter output voltage
8	$R2_{IN}$	Second receiver input voltage
9	$R2_{OUT}$	Second receiver output voltage
10	$T2_{IN}$	Second transmitter input voltage
11	$T1_{IN}$	First transmitter input voltage
12	$R1_{OUT}$	First receiver output voltage
13	$R1_{IN}$	First receiver input voltage
14	$T1_{OUT}$	First transmitter output voltage
15	GND	Ground
16	V_{CC}	Supply voltage

2 Absolute maximum ratings

Table 3. Absolute maximum ratings

Symbol	Parameter	Value	Unit
V_{CC}	Supply voltage	-0.3 to 6	V
V+	Doubled voltage terminal	(V_{CC} - 0.3) to 7	V
V-	Inverted voltage terminal	0.3 to -7	V
V+ +|V-|		13	V
T_{IN}	Transmitter input voltage range	-0.3 to 6	V
R_{IN}	Receiver input voltage range	±25	V
T_{OUT}	Transmitter output voltage range	±13.2	V
R_{OUT}	Receiver output voltage range	-0.3 to (V_{CC} + 0.3)	V
t_{SHORT}	Transmitter output short to gnd time	Continuous	

Note: Absolute maximum ratings are those values beyond which damage to the device may occur. Functional operation under these condition is not implied.

Externally applied V+ and V- can have a maximum magnitude of +7 V, but their absolute addition can not exceed 13 V.

Running on internal charge pump, intrinsic self limitation allows exceeding those values without any damage.

Startup voltage sequence (V_{CC}, then V+, then V-) is critical, therefore it is not recommended to use this device using externally applied voltage to V+ and V-.

Figure 2. ESD performance: transmitter outputs, receiver inputs

Symbol	Parameter	Test conditions	Min.	Typ.	Max.	Unit
ESD	ESD protection voltage	Human body model	±15			kV
ESD	ESD protection voltage	IEC-1000-4-2	±8			kV

3 Electrical characteristics

Table 4. Electrical characteristics (C_1 - C_4 = 0.1 µF, V_{CC} = 3 V to 5.5 V, T_A = -40 to 85 °C, unless otherwise specified. Typical values are referred to T_A = 25 °C)

Symbol	Parameter	Test conditions	Min.	Typ.	Max.	Unit
I_{SUPPLY}	V_{CC} Power supply current	No Load, V_{CC} = 3V or 5V, T_A = 25°C		0.3	1	mA

Table 5. Logic input (C_1 - C_4 = 0.1 µF, V_{CC} = 3 V to 5.5 V, T_A = -40 to 85 °C, unless otherwise specified. Typical values are referred to T_A = 25 °C)

Symbol	Parameter	Test conditions	Min.	Typ.	Max.	Unit
V_{TIL}	Input logic threshold low	T-IN			0.8	V
V_{HYS}	Transmitter input hysteresis			0.25		V
V_{TIH}	Input logic threshold high	V_{CC} = 3.3V	2			V
		V_{CC} = 5V	2.4			
I_{IL}	Input leakage current	T-IN		±0.01	±1	µA

Table 6. Transmitter (C_1 - C_4 = 0.1 µF tested at 3.3 V ±10 %, V_{CC} = 3 V to 5.5 V, T_A = -40 to 85 °C, unless otherwise specified. Typical values are referred to T_A = 25 °C)

Symbol	Parameter	Test conditions	Min.	Typ.	Max.	Unit
V_{TOUT}	Output voltage swing	All transmitter outputs are loaded with 3KΩ to GND	±5	±5.4		V
R_{TOUT}	Transmitter output resistance	V_{CC} = 0V, V_{OUT} = ±2V	300	10M		Ω
I_{SC}	Output short circuit current			±60		mA
I_{TOL}	Output leakage current	V_{CC} = 0V or 3.3V to 5.5V V_{OUT} = ±12V Transmitters disable			±25	µA

Table 7. Receiver (C_1 - C_4 = 0.1 µF tested at 3.3 V ± 10 %, V_{CC} = 3 V to 5.5 V, T_A = -40 to 85 °C, unless otherwise specified. Typical values are referred to T_A = 25 °C)

Symbol	Parameter	Test conditions	Min.	Typ.	Max.	Unit
V_{RIN}	Receiver input voltage operating range		-25		25	V
V_{RIL}	RS-232 Input threshold low	T_A = 25°C, V_{CC} = 3.3V	0.6	1.1		V
		T_A = 25°C, V_{CC} = 5V	0.8	1.5		
V_{RIH}	RS-232 Input threshold high	T_A = 25°C, V_{CC} = 3.3V		1.4	2.4	V
		T_A = 25°C, V_{CC} = 5V		1.8	2.4	
V_{RIHYS}	Input hysteresis			0.5		V
R_{RIN}	Input resistance	T_A = 25°C	3	5	7	kΩ
V_{ROL}	TTL/CMOS Output voltage low	I_{OUT} = 1.6mA			0.4	V
V_{ROH}	TTL/CMOS Output voltage high	I_{OUT} = -1mA	V_{CC}-0.6	V_{CC}-0.1		V

Table 8. Timing characteristics (C_1 - C_4 = 0.1 µF tested at 3.3 V ± 10 %, V_{CC} = 3 V to 5.5 V, T_A = -40 to 85 °C, unless otherwise specified. Typical values are referred to T_A = 25 °C)

Symbol	Parameter	Test conditions	Min.	Typ.	Max.	Unit
D_R	Data transfer rate	R_L = 3KΩ, C_{L2}= 1000pF one transmitter switching	250			Kbps
t_{PHLR} t_{PLHR}	Propagation delay input to output	R_{XIN} = R_{XOUT}, C_L = 150pF		0.15		µs
t_{OER}	Receiver output enable time	Normal Operation		50		ns
t_{ODR}	Receiver output disable time	Normal Operation		50		ns
$\lvert t_{PHLT} - t_{THL} \rvert$	Transmitter propagation delay difference	(*Note 1*)		200		ns
$\lvert t_{PHLR} - t_{THR} \rvert$	Receiver propagation delay difference			50		ns
S_{RT}	Transition slew rate	T_A = 25°C R_L = 3KΩ to 7KΩ V_{CC} = 3.3V measured from +3V to -3V or -3V to +3V C_L = 150pF to 1000pF C_L = 150pF to 2500pF	 6 4		 30 30	 V/µs V/µs

Note: 1 Transmitter skew is measured at the transmitter zero cross points

4 Application

Figure 3. Application circuits

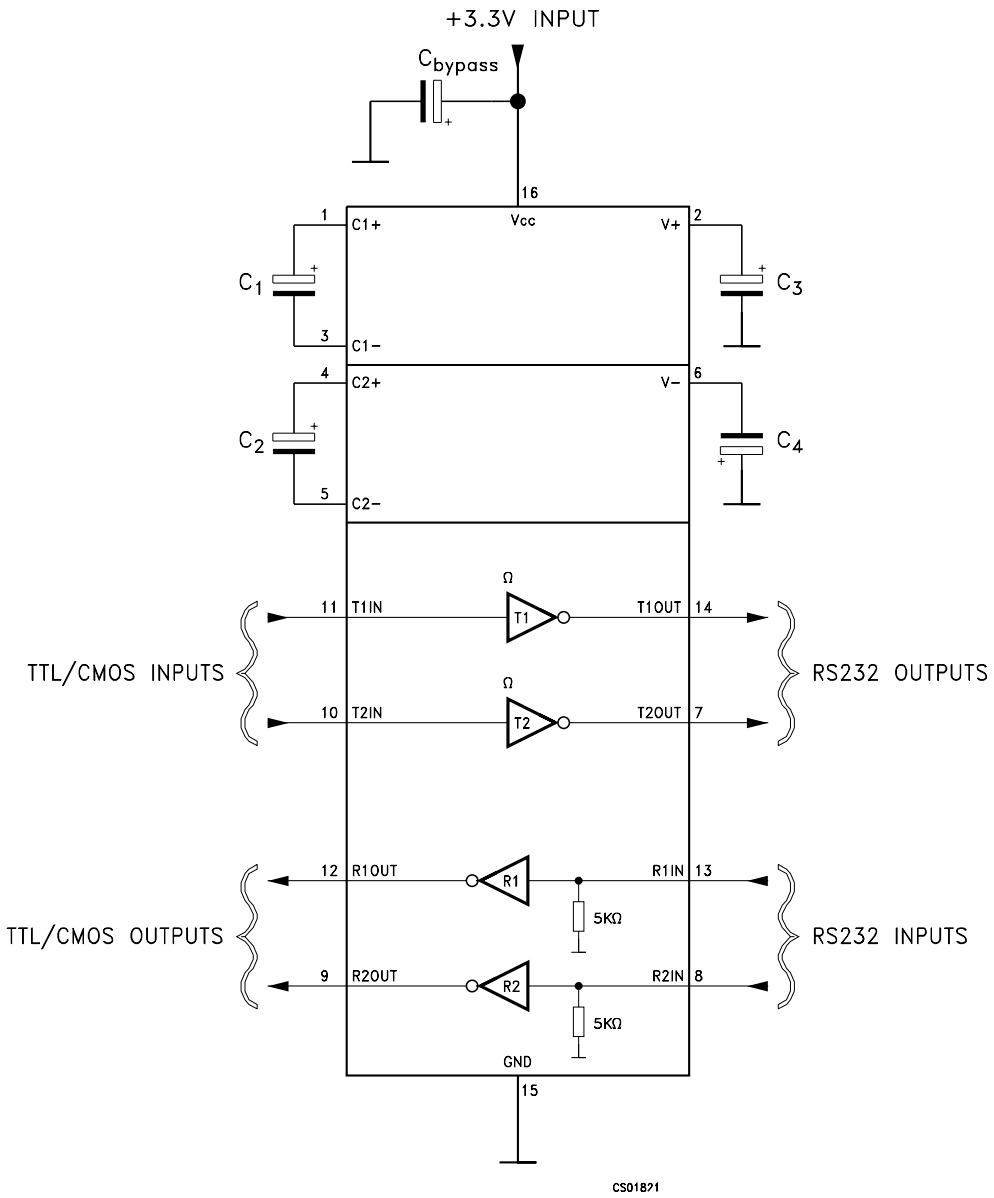

Table 9. Capacitance value (µF)

V_{CC}	C1	C2	C3	C4	Cbypass
3.0 to 3.6	0.1	0.1	0.1	0.1	0.1
4.5 to 5.5	0.047	0.33	0.33	0.33	0.1
3.0 to 5.5	0.1	0.47	0.47	0.47	0.1

5 Typical performance characteristics

(unless otherwise specified T_J = 25 °C)

Figure 4. Output current vs output high voltage

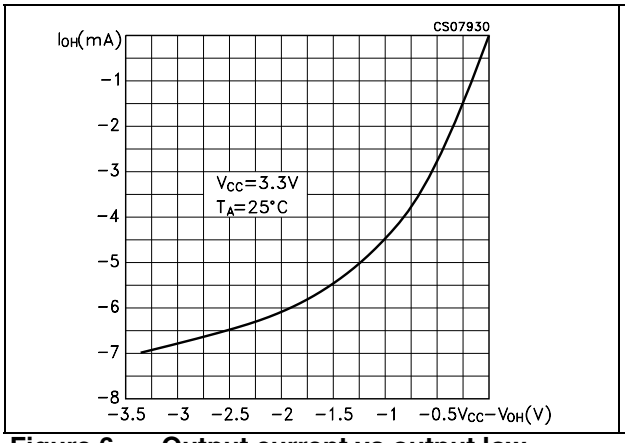

Figure 5. Output current vs output high voltage

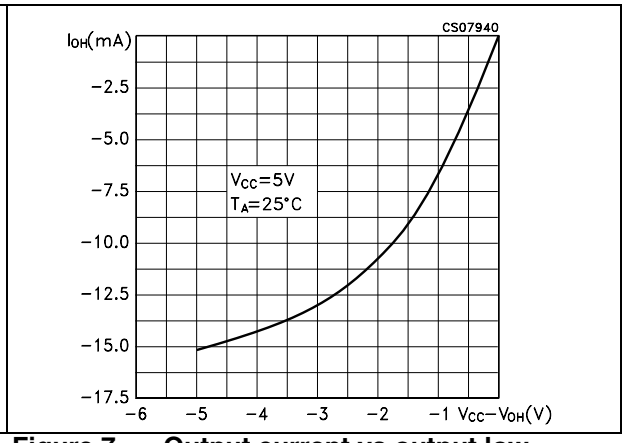

Figure 6. Output current vs output low voltage

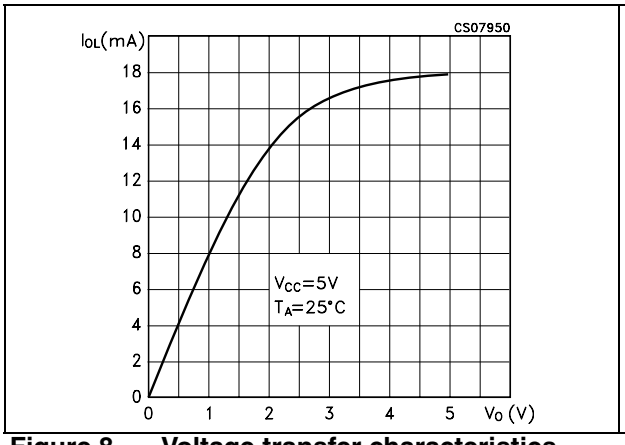

Figure 7. Output current vs output low voltage

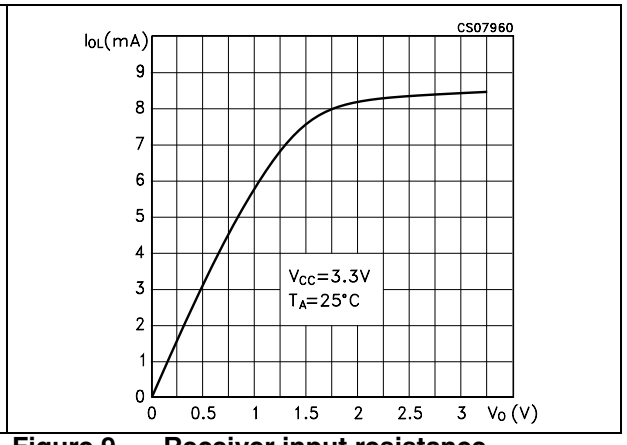

Figure 8. Voltage transfer characteristics for transmitter inputs

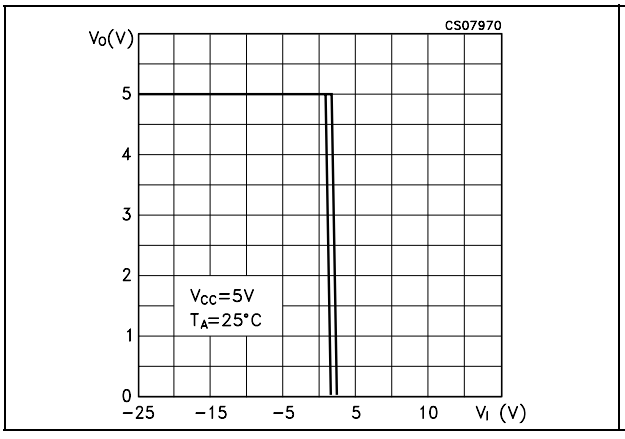

Figure 9. Receiver input resistance

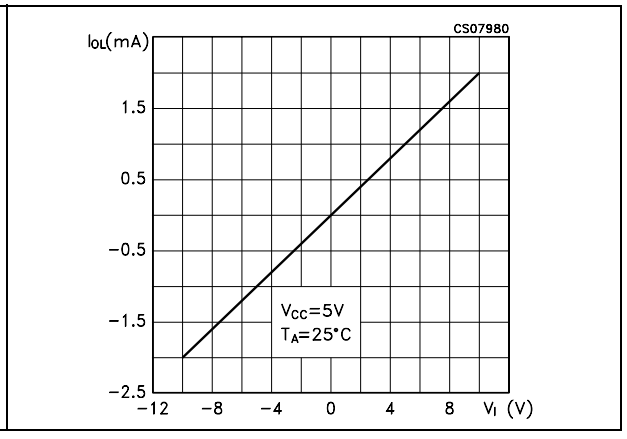

6 Package mechanical data

In order to meet environmental requirements, ST offers these devices in ECOPACK® packages. These packages have a lead-free second level interconnect. The category of second Level Interconnect is marked on the package and on the inner box label, in compliance with JEDEC Standard JESD97. The maximum ratings related to soldering conditions are also marked on the inner box label. ECOPACK is an ST trademark. ECOPACK specifications are available at: www.st.com.

Plastic DIP-16 (0.25) mechanical data

Dim.	mm.			inch.		
	Min.	Typ.	Max.	Min.	Typ.	Max.
a1	0.51			0.020		
B	0.77		1.65	0.030		0.065
b		0.5			0.020	
b1		0.25			0.010	
D			20			0.787
E		8.5			0.335	
e		2.54			0.100	
e3		17.78			0.700	
F			7.1			0.280
I			5.1			0.201
L		3.3			0.130	
Z			1.27			0.050

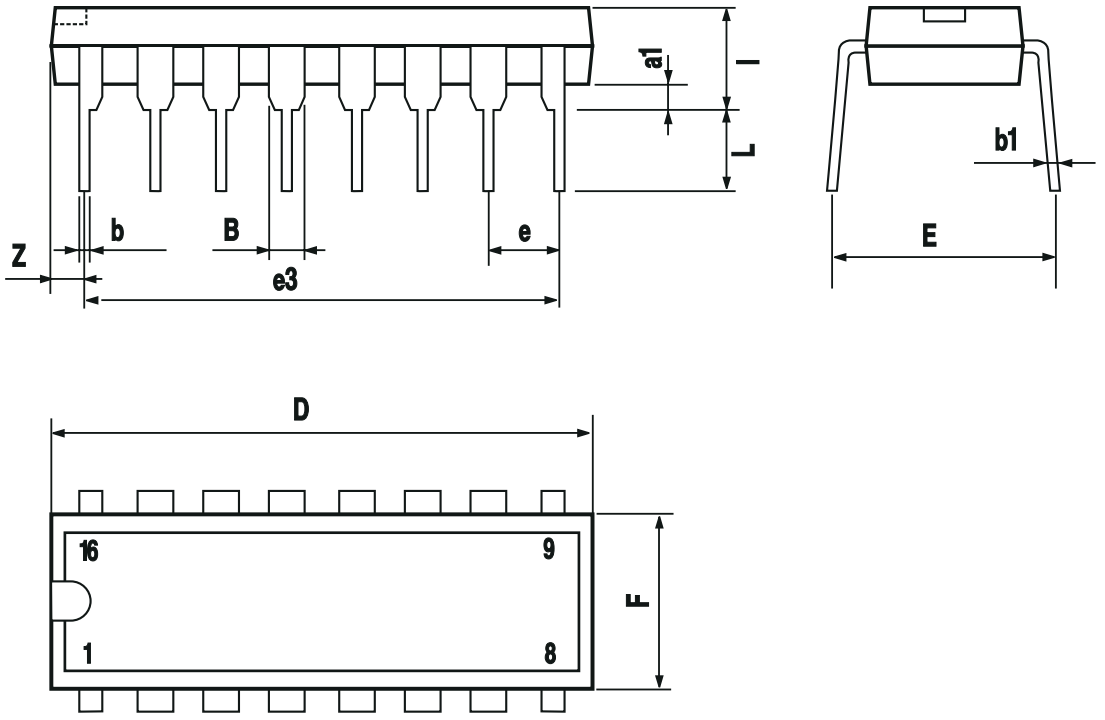

P001C

SO-16 mechanical data

Dim.	mm.			inch.		
	Min.	Typ.	Max.	Min.	Typ.	Max.
A			1.75			0.068
a1	0.1		0.25	0.004		0.010
a2			1.64			0.063
b	0.35		0.46	0.013		0.018
b1	0.19		0.25	0.007		0.010
C		0.5			0.019	
c1	45° (typ.)					
D	9.8		10	0.385		0.393
E	5.8		6.2	0.228		0.244
e		1.27			0.050	
e3		8.89			0.350	
F	3.8		4.0	0.149		0.157
G	4.6		5.3	0.181		0.208
L	0.5		1.27	0.019		0.050
M			0.62			0.024
S	8° (max.)					

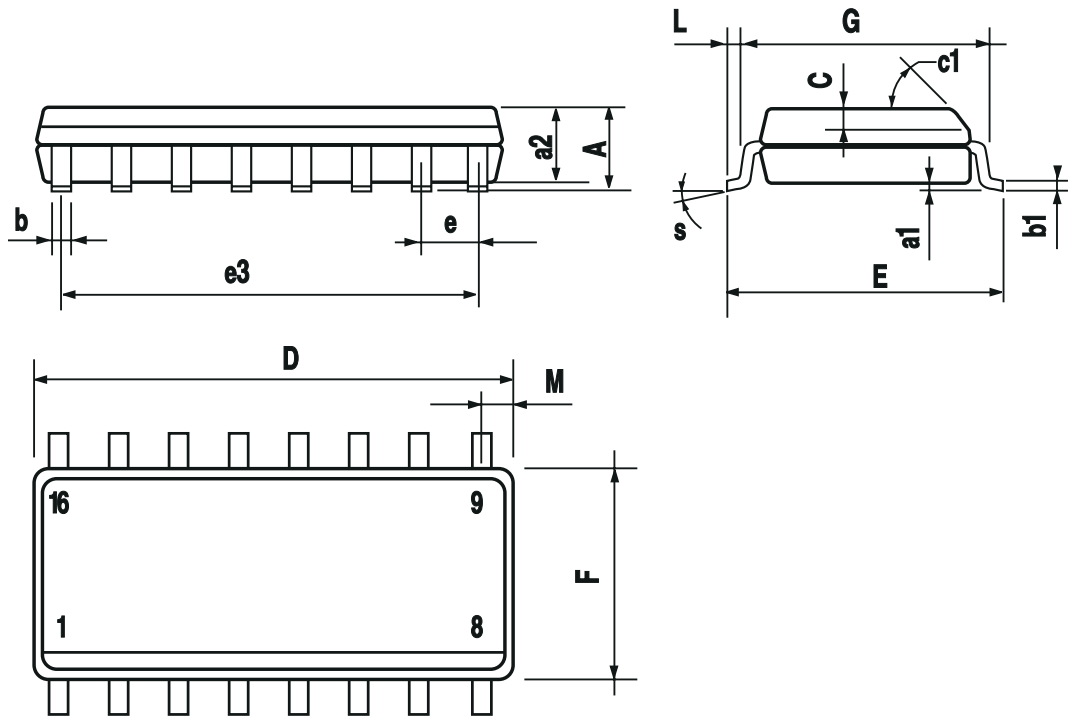

SO-16L mechanical data

Dim.	mm.			inch.		
	Min.	Typ.	Max.	Min.	Typ.	Max.
A			2.65			0.104
a1	0.1		0.2	0.004		0.008
a2			2.45			0.096
b	0.35		0.49	0.014		0.019
b1	0.23		0.32	0.009		0.012
C		0.5			0.020	
c1	45° (typ.)					
D	10.1		10.5	0.397		0.413
E	10.0		10.65	0.393		0.419
e		1.27			0.050	
e3		8.89			0.350	
F	7.4		7.6	0.291		0.300
G						
L	0.5		1.27	0.020		0.050
M			0.75			0.029
S	8° (max.)					

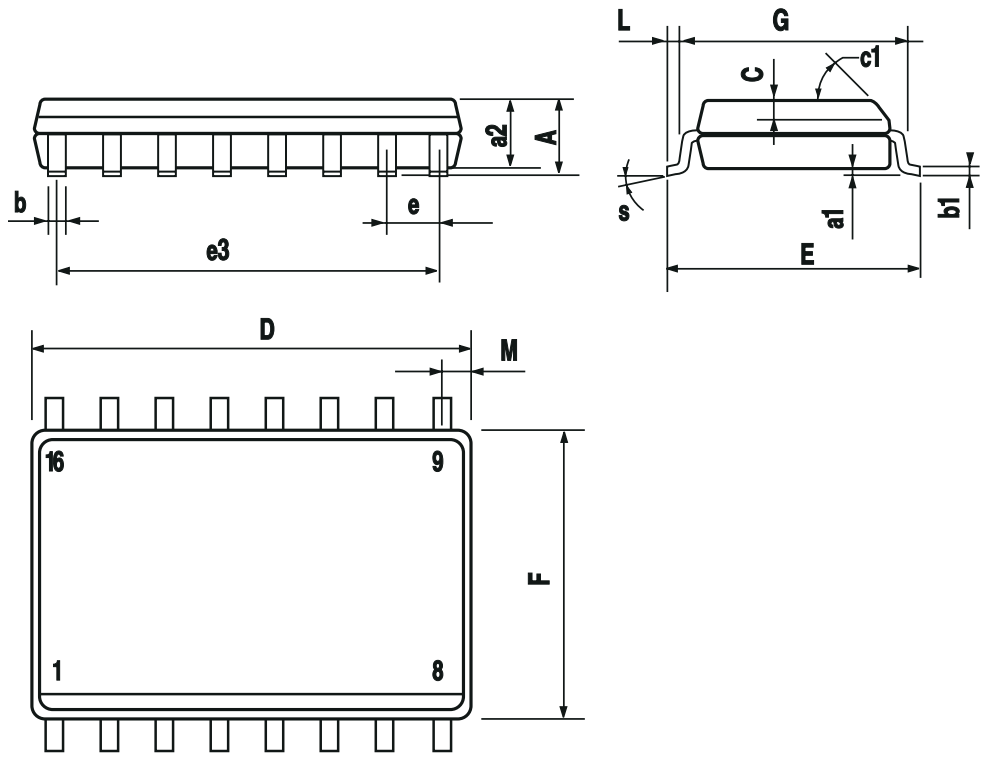

PO13I

SSOP16 mechanical data

Dim.	mm.			inch.		
	Min.	Typ.	Max.	Min.	Typ.	Max.
A			2			0.079
A1	0.05		0.21	0.002		0.008
A2	1.65		1.85	0.065		0.073
b	0.22		0.38	0.009		0.015
c	0.09		0.25	0.0035		0.0098
D	5.9		6.5	0.232		0.256
E	7.4		8.2	0.291		0.323
E1	5.3	5	5.6	0.197	0.209	0.220
e		0.65			0.0256	
K	0°		8°	0°		8°
L	0.55		0.95	0.022		0.037

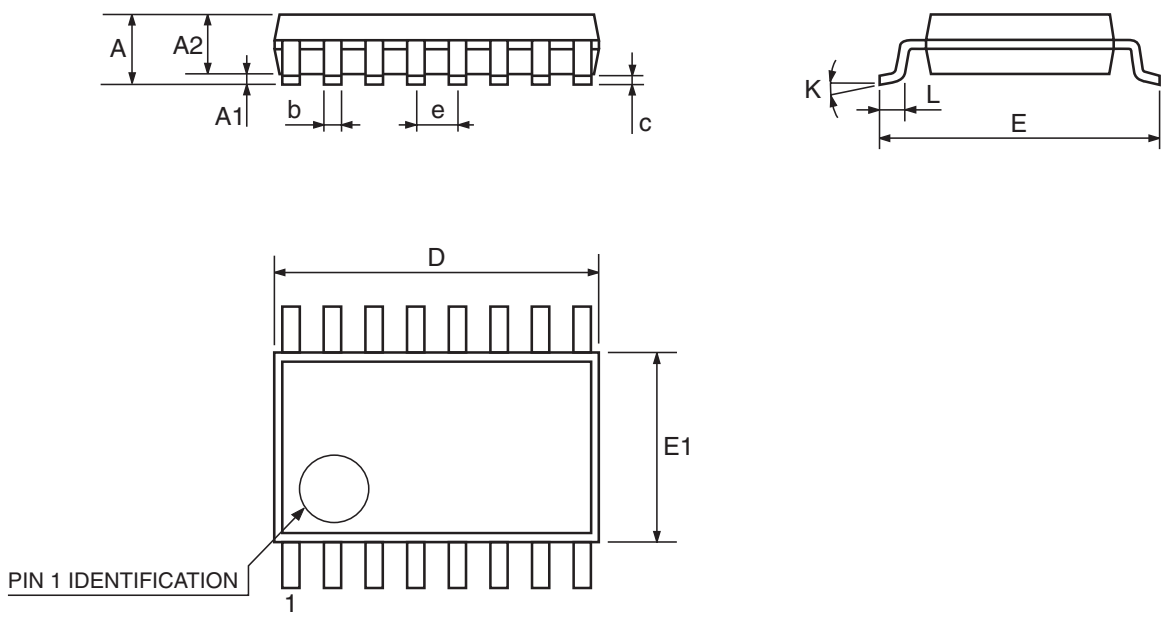

7299589/A

TSSOP16 mechanical data

Dim.	mm.			inch.		
	Min.	Typ.	Max.	Min.	Typ.	Max.
A			1.2			0.047
A1	0.05		0.15	0.002	0.004	0.006
A2	0.8	1	1.05	0.031	0.039	0.041
b	0.19		0.30	0.007		0.012
c	0.09		0.20	0.004		0.0079
D	4.9	5	5.1	0.193	0.197	0.201
E	6.2	6.4	6.6	0.244	0.252	0.260
E1	4.3	4.4	4.48	0.169	0.173	0.176
e		0.65 BSC			0.0256 BSC	
K	0°		8°	0°		8°
L	0.45	0.60	0.75	0.018	0.024	0.030

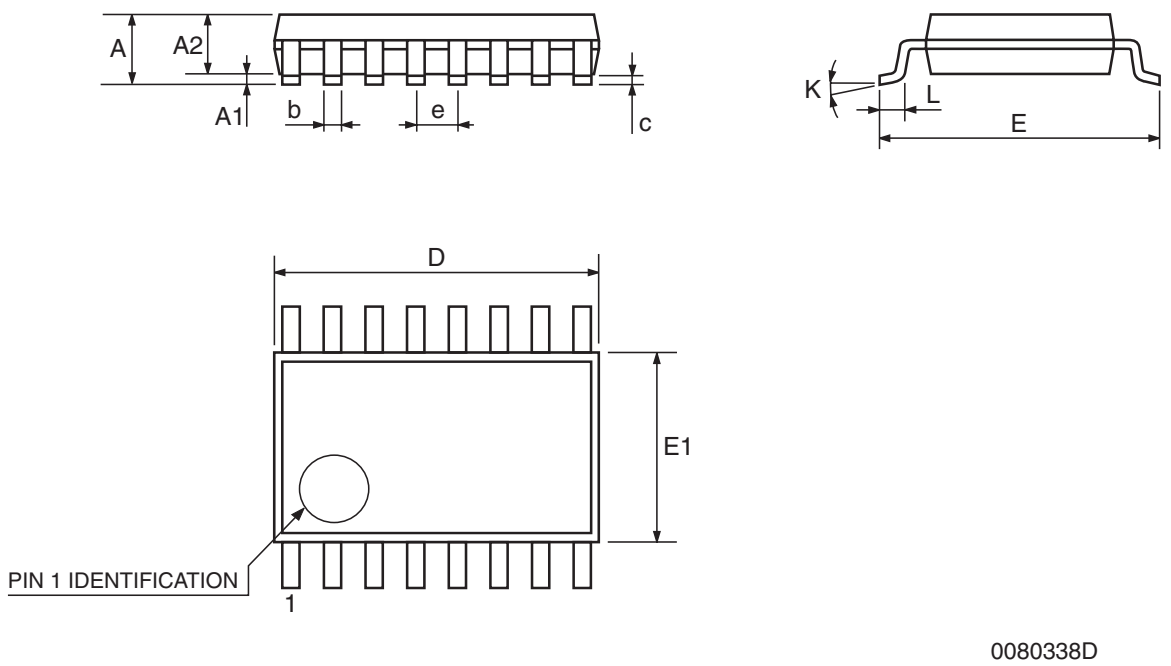

Tape & reel SO-16 mechanical data

Dim.	mm.			inch.		
	Min.	Typ.	Max.	Min.	Typ.	Max.
A			330			12.992
C	12.8		13.2	0.504		0.519
D	20.2			0.795		
N	60			2.362		
T			22.4			0.882
Ao	6.45		6.65	0.254		0.262
Bo	10.3		10.5	0.406		0.414
Ko	2.1		2.3	0.082		0.090
Po	3.9		4.1	0.153		0.161
P	7.9		8.1	0.311		0.319

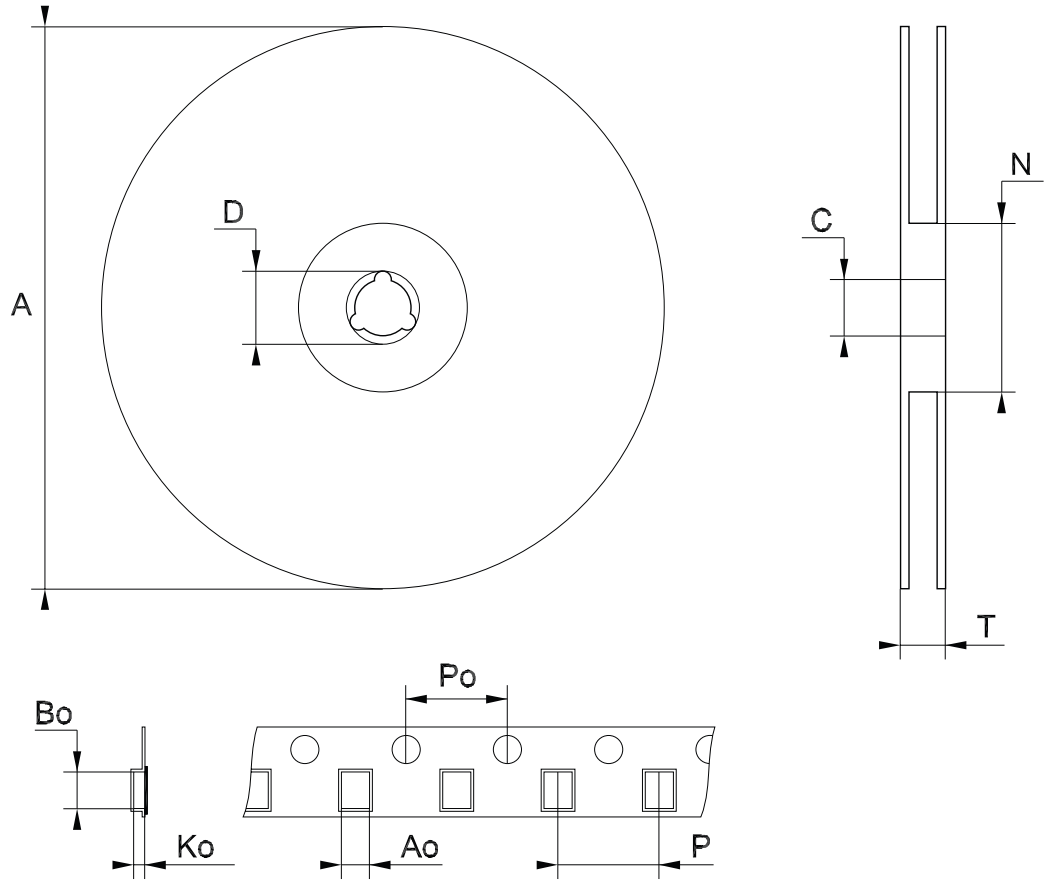

Note: Drawing not in scale

Tape & reel SO-16L mechanical data

Dim.	mm.			inch.		
	Min.	Typ.	Max.	Min.	Typ.	Max.
A			330			12.992
C	12.8		13.2	0.504		0.519
D	20.2			0.795		
N	60			2.362		
T			22.4			0.882
Ao	10.8		11.0	0.425		0.433
Bo	10.7		10.9	0.421		0.429
Ko	2.9		3.1	0.114		0.122
Po	3.9		4.1	0.153		0.161
P	11.9		12.1	0.468		0.476

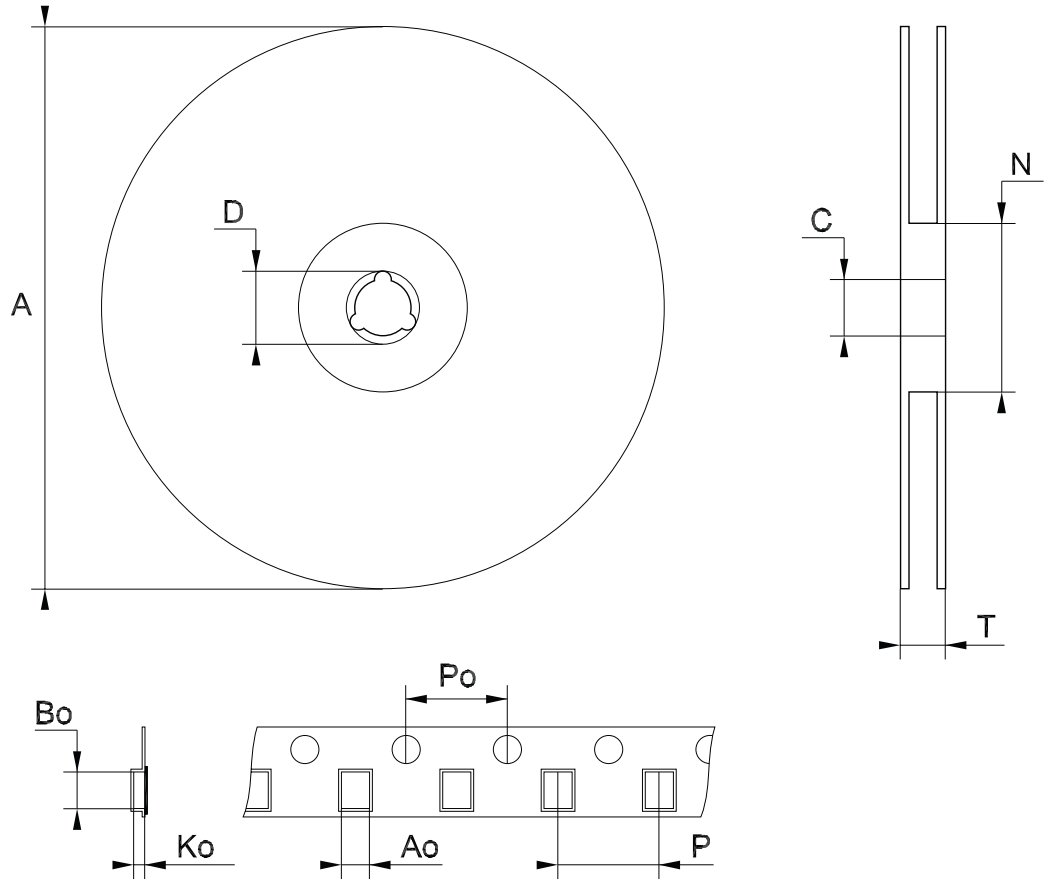

Note: Drawing not in scale

Tape & reel SSOP16 mechanical data

Dim.	mm.			inch.		
	Min.	Typ.	Max.	Min.	Typ.	Max.
A			330			12.992
C	12.8		13.2	0.504		0.519
D	20.2			0.795		
N	60			2.362		
T			22.4			0.882
Ao	8.4		8.6	0.331		0.339
Bo	6.7		6.9	0.264		0.272
Ko	2.9		3.1	0.114		0.122
Po	3.9		4.1	0.153		0.161
P	11.9		12.1	0.468		0.476

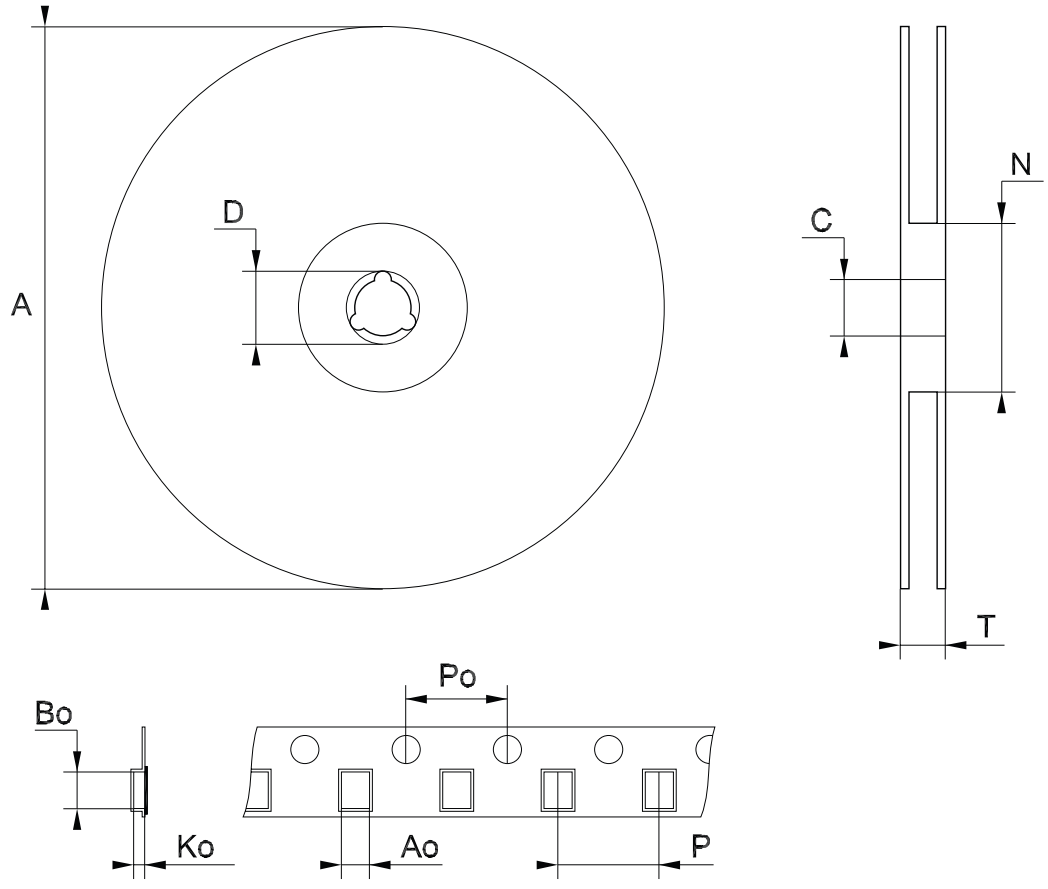

Note: Drawing not in scale

Tape & reel TSSOP16 mechanical data

Dim.	mm.			inch.		
	Min.	Typ.	Max.	Min.	Typ.	Max.
A			330			12.992
C	12.8		13.2	0.504		0.519
D	20.2			0.795		
N	60			2.362		
T			22.4			0.882
Ao	6.7		6.9	0.264		0.272
Bo	5.3		5.5	0.209		0.217
Ko	1.6		1.8	0.063		0.071
Po	3.9		4.1	0.153		0.161
P	7.9		8.1	0.311		0.319

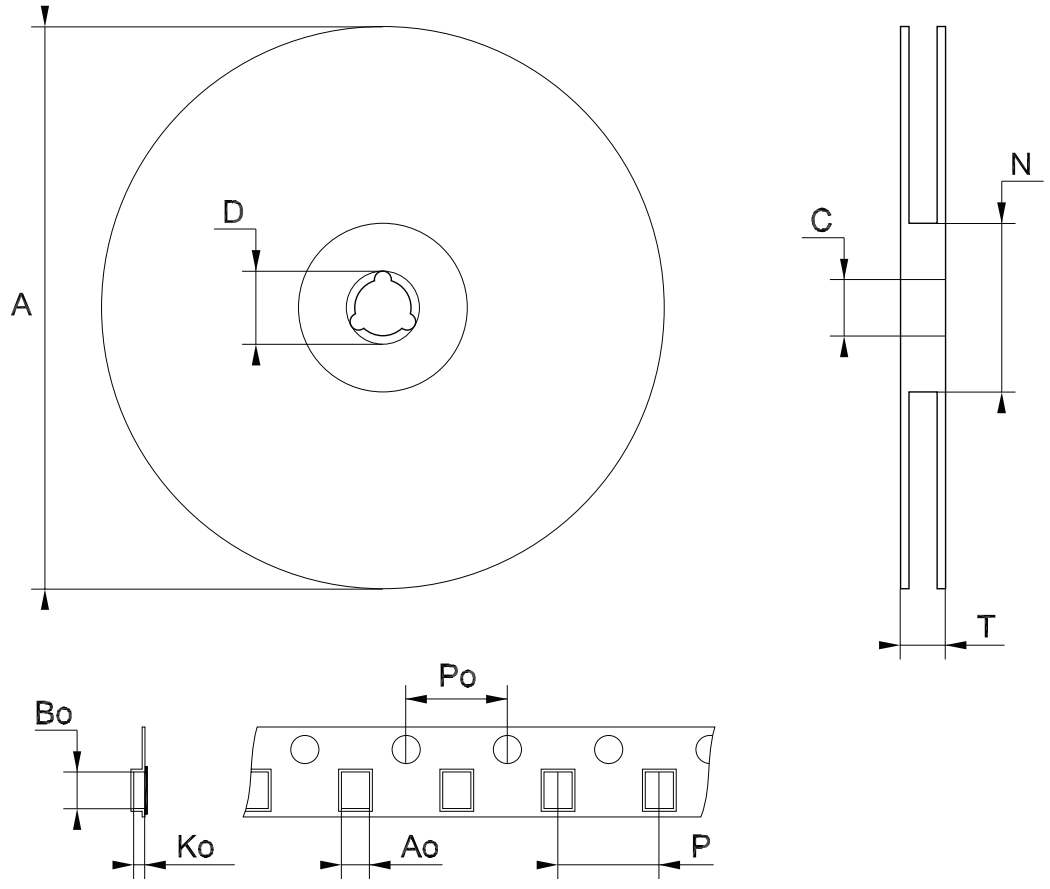

Note: Drawing not in scale

7 Revision history

Table 10. Document revision history

Date	Revision	Changes
06-Sep-2006	3	Order codes updated.
21-Jan-2008	4	Added: *Table 1* and note on *Table 3*.

Please Read Carefully:

Information in this document is provided solely in connection with ST products. STMicroelectronics NV and its subsidiaries (“ST”) reserve the right to make changes, corrections, modifications or improvements, to this document, and the products and services described herein at any time, without notice.

All ST products are sold pursuant to ST’s terms and conditions of sale.

Purchasers are solely responsible for the choice, selection and use of the ST products and services described herein, and ST assumes no liability whatsoever relating to the choice, selection or use of the ST products and services described herein.

No license, express or implied, by estoppel or otherwise, to any intellectual property rights is granted under this document. If any part of this document refers to any third party products or services it shall not be deemed a license grant by ST for the use of such third party products or services, or any intellectual property contained therein or considered as a warranty covering the use in any manner whatsoever of such third party products or services or any intellectual property contained therein.

UNLESS OTHERWISE SET FORTH IN ST’S TERMS AND CONDITIONS OF SALE ST DISCLAIMS ANY EXPRESS OR IMPLIED WARRANTY WITH RESPECT TO THE USE AND/OR SALE OF ST PRODUCTS INCLUDING WITHOUT LIMITATION IMPLIED WARRANTIES OF MERCHANTABILITY, FITNESS FOR A PARTICULAR PURPOSE (AND THEIR EQUIVALENTS UNDER THE LAWS OF ANY JURISDICTION), OR INFRINGEMENT OF ANY PATENT, COPYRIGHT OR OTHER INTELLECTUAL PROPERTY RIGHT.

UNLESS EXPRESSLY APPROVED IN WRITING BY AN AUTHORIZED ST REPRESENTATIVE, ST PRODUCTS ARE NOT RECOMMENDED, AUTHORIZED OR WARRANTED FOR USE IN MILITARY, AIR CRAFT, SPACE, LIFE SAVING, OR LIFE SUSTAINING APPLICATIONS, NOR IN PRODUCTS OR SYSTEMS WHERE FAILURE OR MALFUNCTION MAY RESULT IN PERSONAL INJURY, DEATH, OR SEVERE PROPERTY OR ENVIRONMENTAL DAMAGE. ST PRODUCTS WHICH ARE NOT SPECIFIED AS "AUTOMOTIVE GRADE" MAY ONLY BE USED IN AUTOMOTIVE APPLICATIONS AT USER’S OWN RISK.

Resale of ST products with provisions different from the statements and/or technical features set forth in this document shall immediately void any warranty granted by ST for the ST product or service described herein and shall not create or extend in any manner whatsoever, any liability of ST.

ST and the ST logo are trademarks or registered trademarks of ST in various countries.

Information in this document supersedes and replaces all information previously supplied.

The ST logo is a registered trademark of STMicroelectronics. All other names are the property of their respective owners.

© 2008 STMicroelectronics - All rights reserved

STMicroelectronics group of companies

Australia - Belgium - Brazil - Canada - China - Czech Republic - Finland - France - Germany - Hong Kong - India - Israel - Italy - Japan - Malaysia - Malta - Morocco - Singapore - Spain - Sweden - Switzerland - United Kingdom - United States of America

www.st.com